TECHNISCHE UNIVERSITÄT WIEN
Vienna University of Technology

Fluiddynamik (CFD) thermischer Trennverfahren

166.050 RU, 166.049 VO, 2014S

Philipp Schretter
Matr. Nr. 0717910

Task of the case study

- Preprocessor: Fluent Gambit 2.4.6
- CFD software: Ansys Fluent 6.3
- Mixing process in a tank with and without tube extension into the tank
  - Convergence of calculation
  - Visualization
  - Pressure Drop
  - Homogenity of the mixture
  - Residence Time Distribution

Geometry and boundary conditions

- Tubes: inlet 1 (humid), inlet 2 (dry): 80 cells in the cross section
  outlet: 960 cells in the cross section
- Tank: cell size: 0,017m
- Total nr. of cells: 249600
- Inlet velocities: u_1 = 5 m/s, u_2 = 20 m/s
- Relative humidity at inlet 1: 95%rH
- Temperature: 90°C
- $Pressure_{outlet}$: 1 atm
- Gravity: none
- Walls: adiabatic, ideally smooth

Number of cells

- Total nr. of cells: 249600

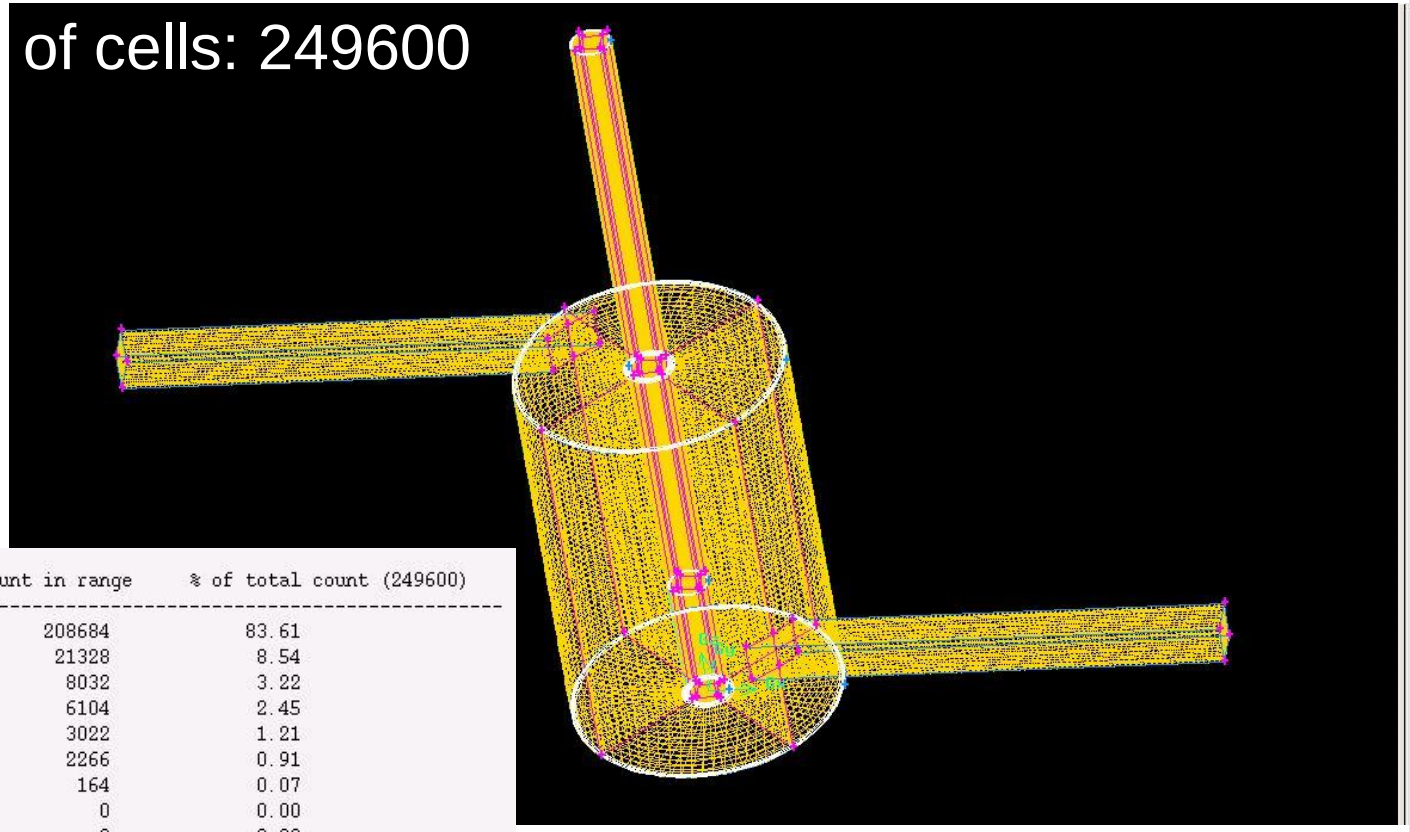

From value	To value	Count in range	% of total count (249600)
0	0.1	208684	83.61
0.1	0.2	21328	8.54
0.2	0.3	8032	3.22
0.3	0.4	6104	2.45
0.4	0.5	3022	1.21
0.5	0.6	2266	0.91
0.6	0.7	164	0.07
0.7	0.8	0	0.00
0.8	0.9	0	0.00
0.9	1	0	0.00
0	1	249600	100.00

Measured minimum value: 1.30573e-10
Measured maximum value: 0.633265

Geometry and boundary conditions

- Dimensions: d = 0,15m, d_{out}= 0,15m, D = 1m, h = 1,5m,
  L = 0,6667*h, h1 = 0,1*h, h2 = 0,7*h
- Configuration inlet tubes: K2
- Footprint of the tank: A

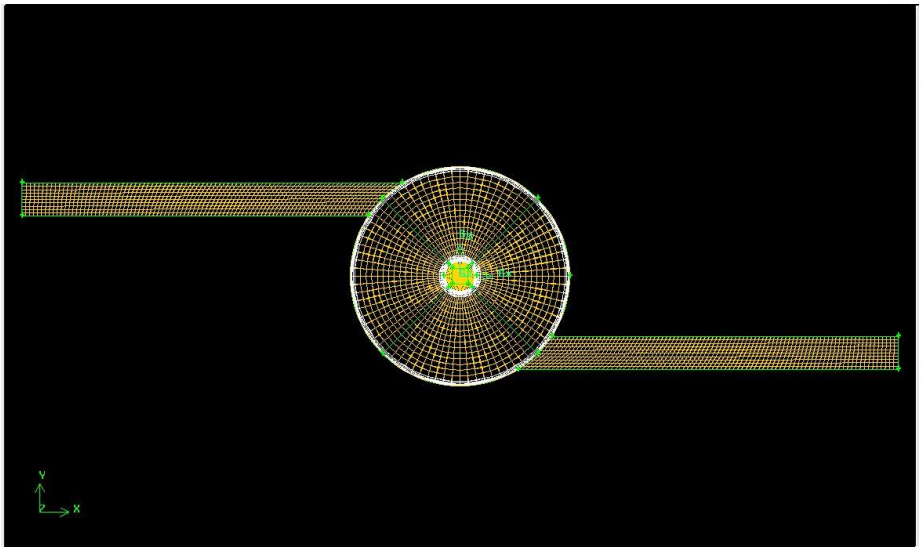

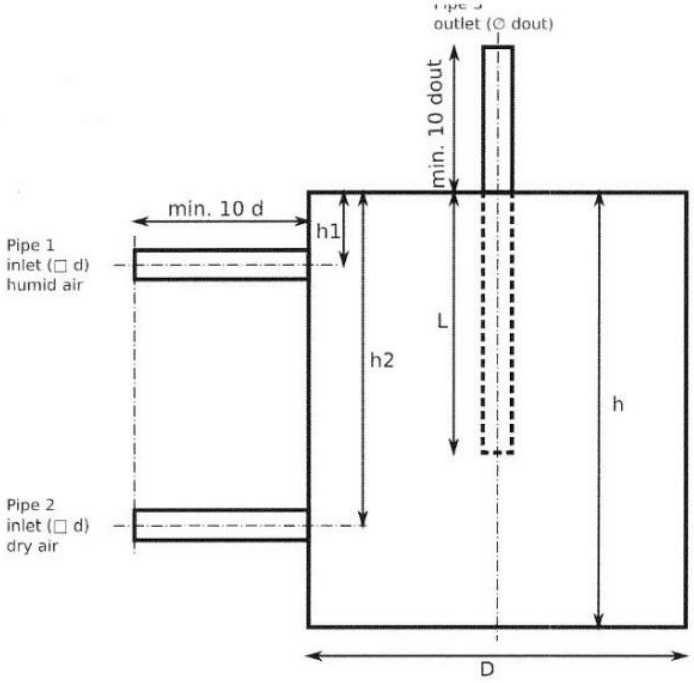

The mesh

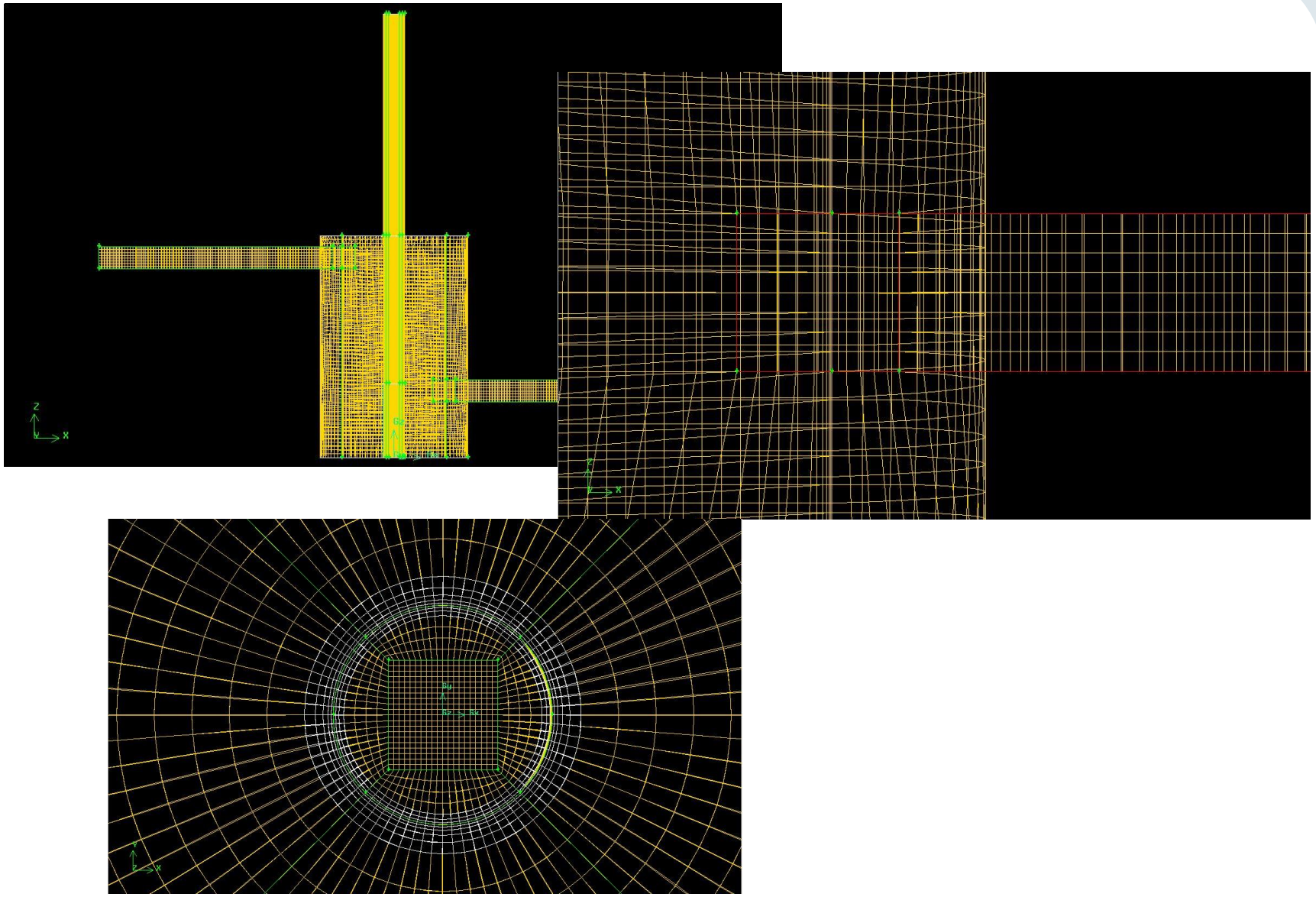

Input parameters Fluent

- Solver: Solver: Pressure based

  Gradient Option: Green-Gauss Cell based
- Multiphase off →Species: Transport & Reaction
- Viscous Model: k-ε, realizable
- Materials: Air and water vapour from fluent database; incompressible ideal gas
- Operating Conditions: Operating pressure 1 atm
- Differential equations discretization: 2nd order upwind for pressure, momentum, turbulent kinetic energy, turbulent dissipation rate, energy

Input parameters Fluent

- Boundary conditions
  - Dry air and Humid air: Turbulence: Intensity 3% and Hydraulic Diameter 1m

    Thermal: Temperature: 363K

Turbulence intensity	I=0,16*Re^(-1/8)	Re with ρ=0,96; d=0,15; η=21,49
v [m/s]	20	5
η	0,000021492	1,62817E-05
Re	133 967,06	30 759,79
I	0,0366	0,0440

  - Humid air: Species mass frac. = 0.54479

$$X = 0.622\frac{p_W}{(p - p_W)} = 0.622\frac{p_W^s(T)}{(p/\varphi) - p_W^s(T)}$$

with $Pw_{saturation,H20}$=0,7018

  - Wall: Thermal Condition: heat flux 0

    Roughness Constant: 0
  - B.C for tank without interior wall: walltube: **type**: interior
  - B.C. for tank with interior wall: walltube and walltube-shadow: **type**: wall; **Thermal Condition**: heat flux 0;

Input parameters Fluent

- Solution Initialization with interior pipe
  - X Velocity (m/s): 5

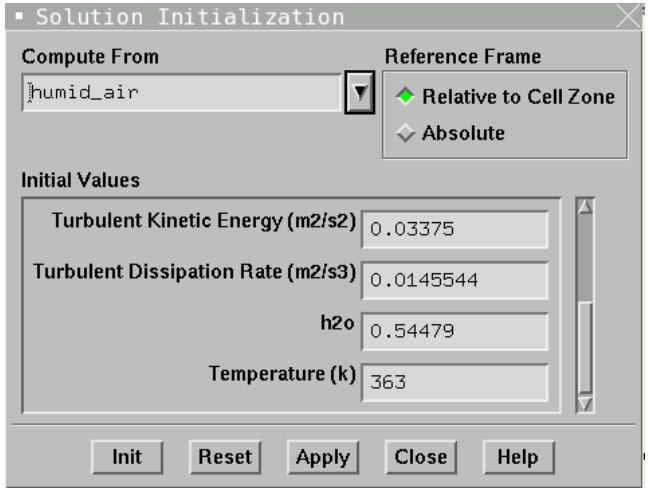

- Solution Initialization without interior pipe

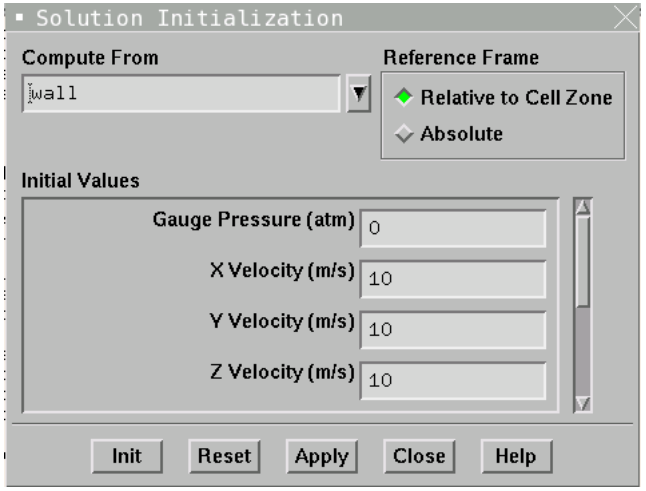

- Under realxation factors:

  for both cases: Pressure 0,3
  Momentum 0,4

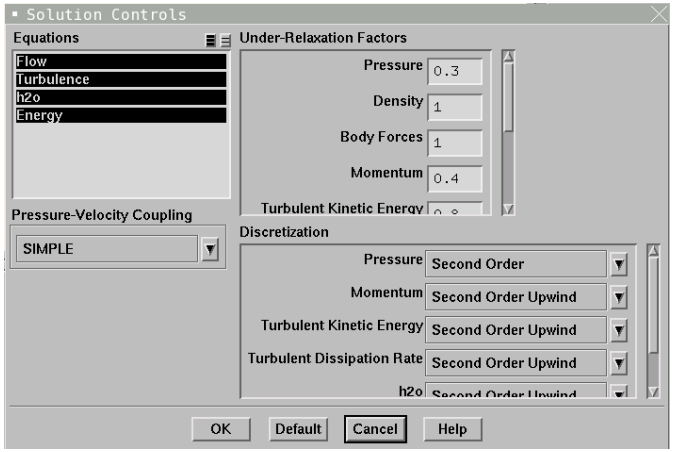

Convergence Monitors

- Convergence Criteria for both cases
  - Residual Monitors:

  10^{-3} for k, ε, h_20

  10^{-5} for continuity and velocities

  10^{-6} for energy
- Convergence of tank with pipe:

  Converged after 7528 iterations
- Velocity at the outlet is reasonable: 34 m/s

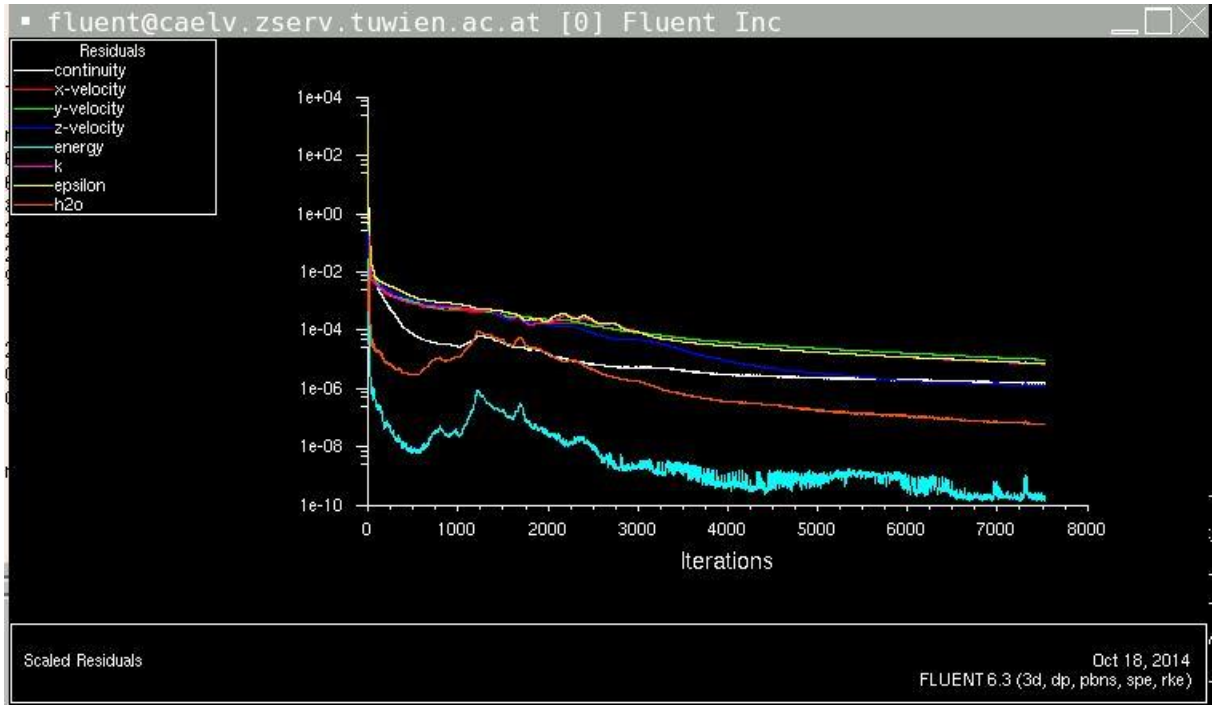

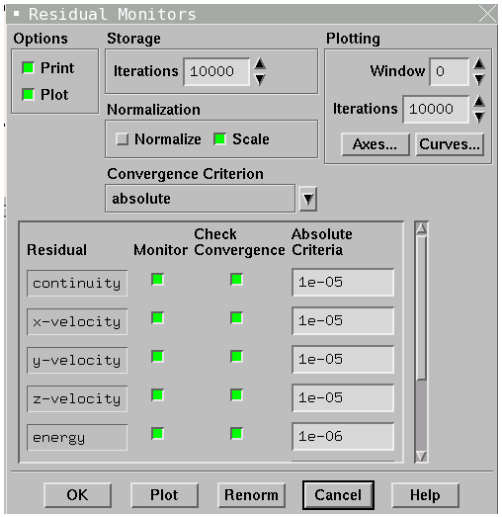


```
Reading "/home/e166st7/schretter.philipp/pps/pps_mit_rohr/pps143.dat"...
Done.

                         Mass Flow Rate               (kg/s)
------------------------------------ --------------------
                                dry_air           0.43760598
                              humid_air            0.0821856
                                 outlet          -0.51979168
                ------------------------ --------------------
                                    Net               -1e-07
```

Convergence Monitors

- Monitors on the outlet: Pressure, temperature turbulence, velocity

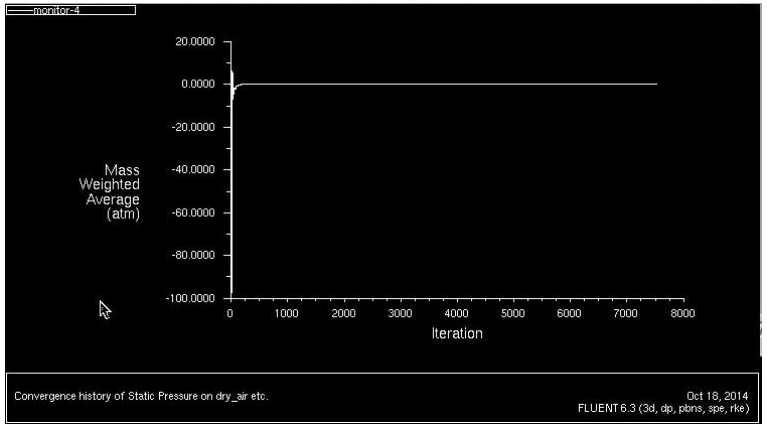

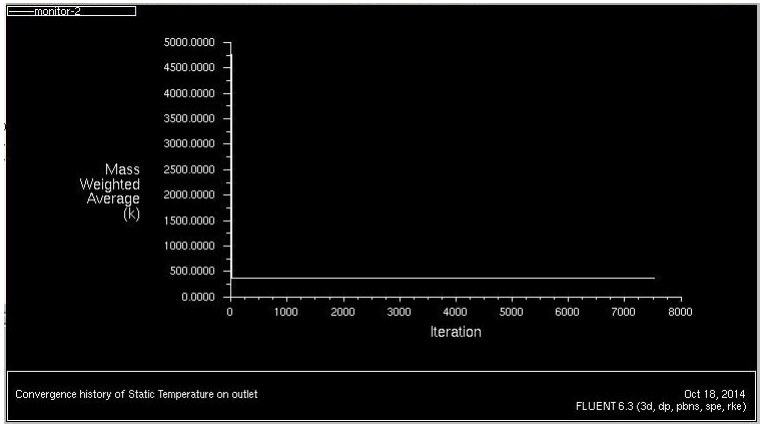

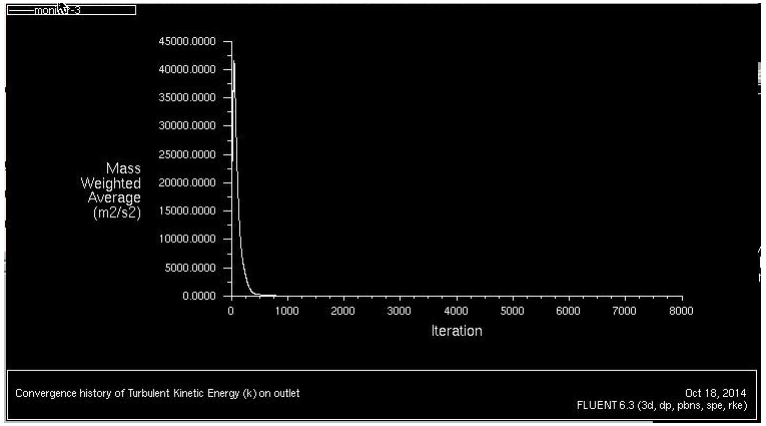

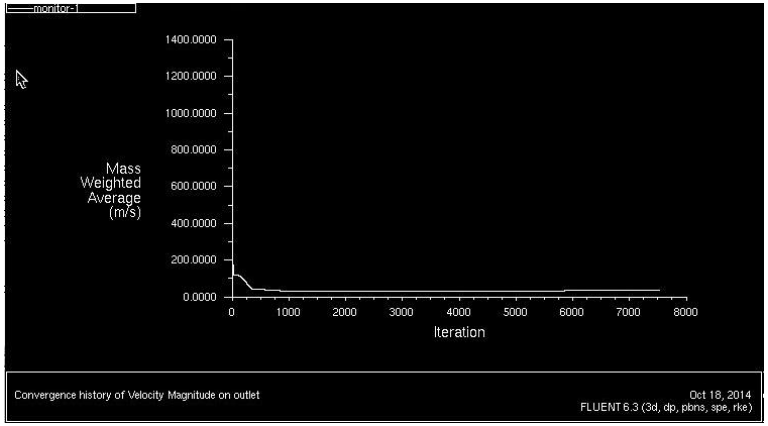

Convergence Monitors

- Convergence of Tank without interior pipe:
  Solution converged after 7790 iterations

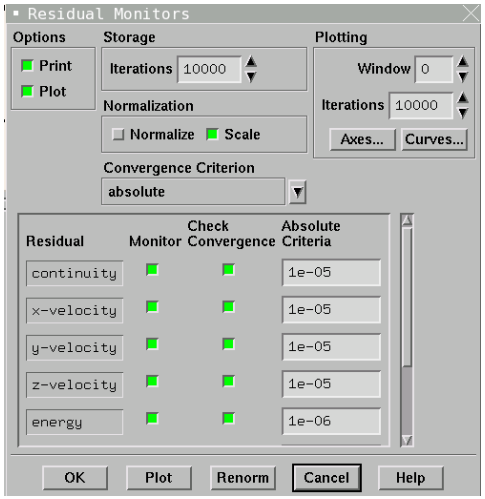

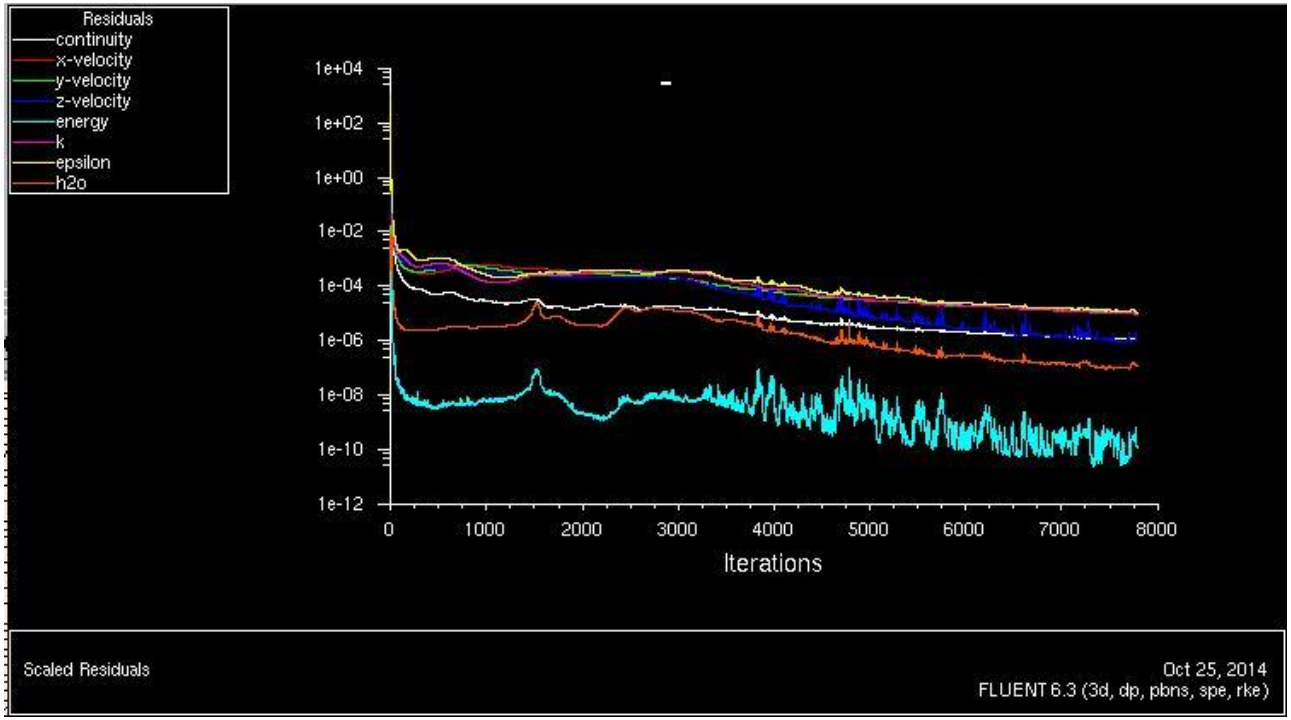

- Mass balance:

Mass Flow Rate	(kg/s)
dry_air	0.43760598
humid_air	0.0821856
outlet	-0.51978725
Net	4.33e-06

Convergence Monitors

- Monitors on the outlet: mass fraction, static pressure temperature, turbulence, velocity

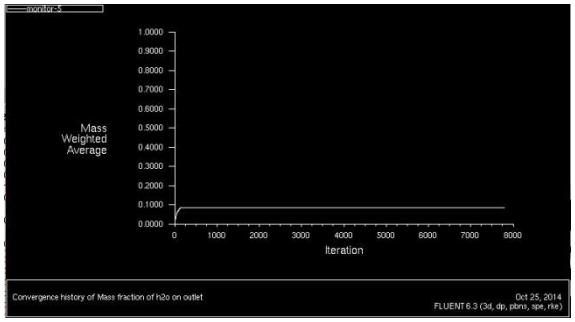

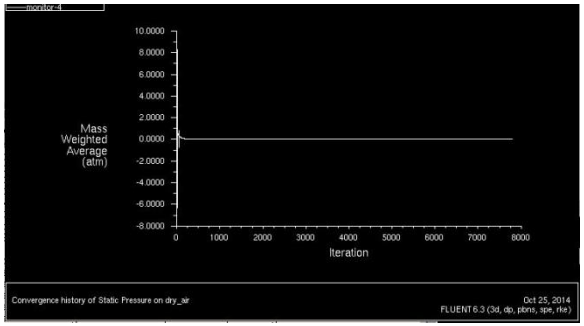

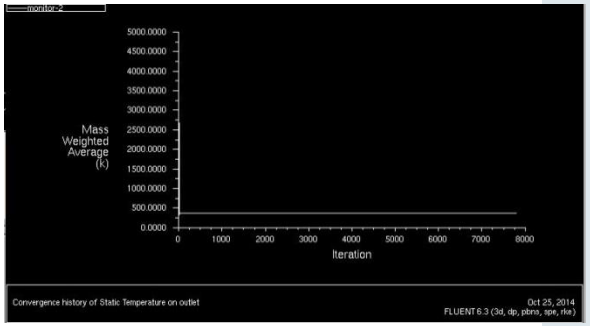

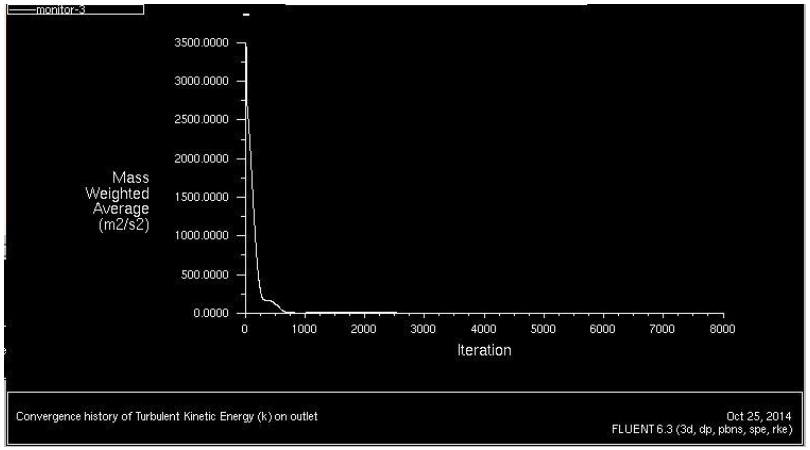

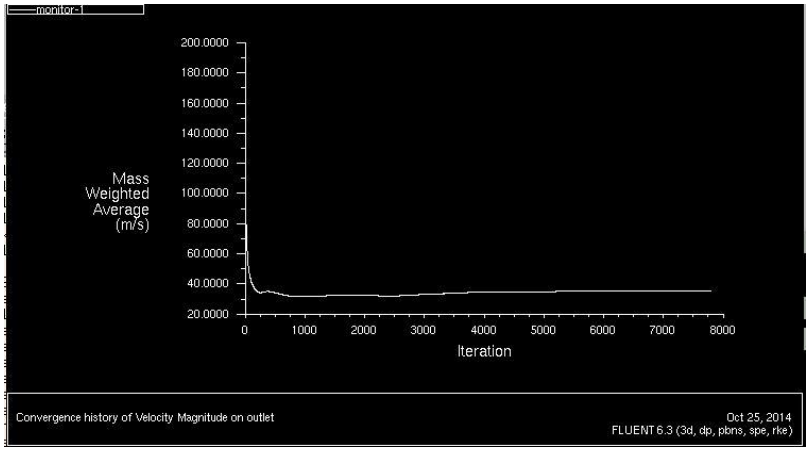

Flow in the pipes and in the tank: Velocity

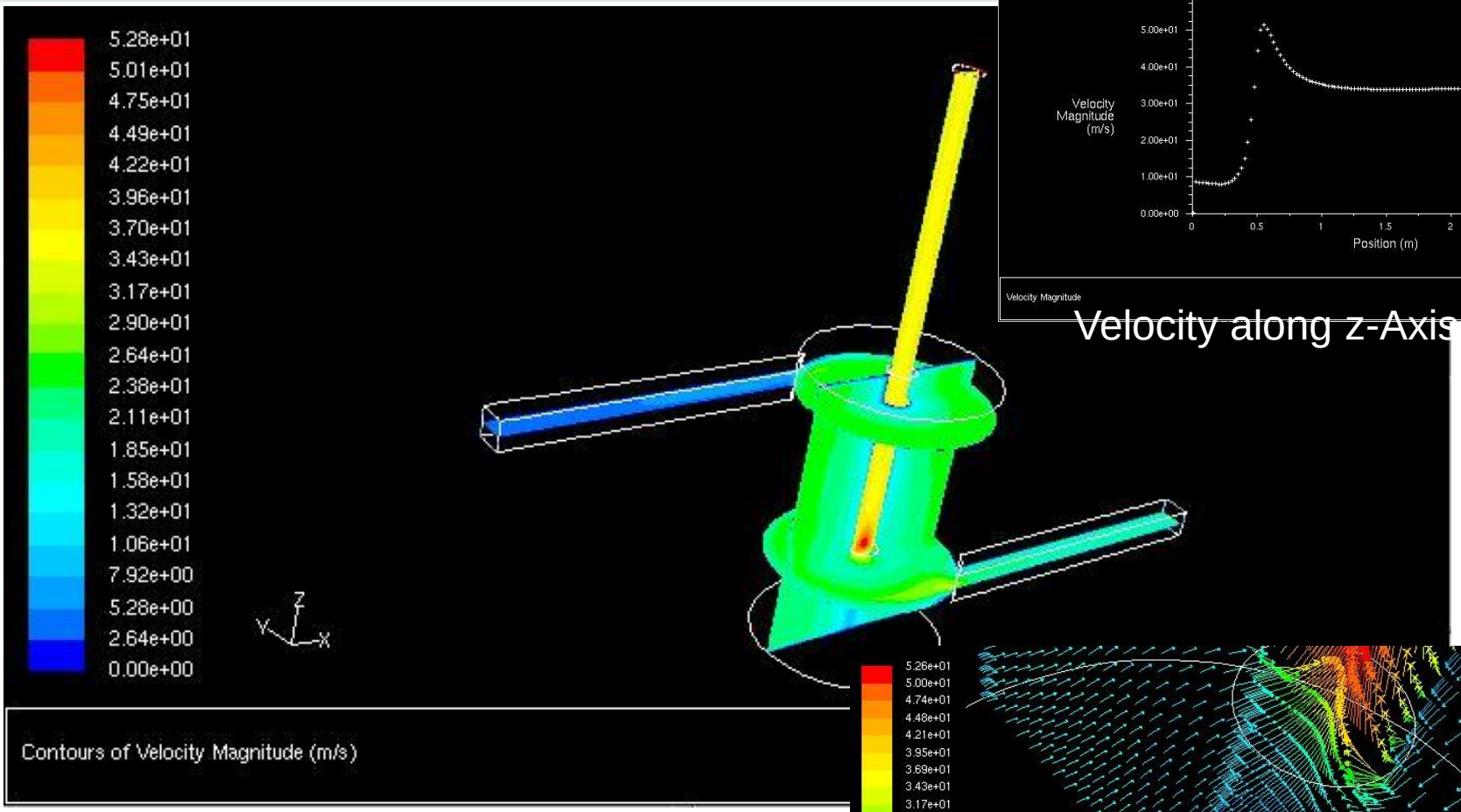

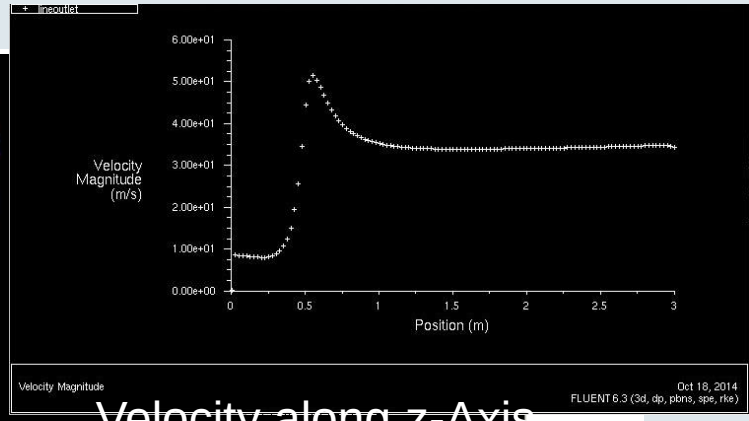

Velocity along z-Axis

Area-Weighted Average Velocity Magnitude	(m/s)
outlet	34.096836

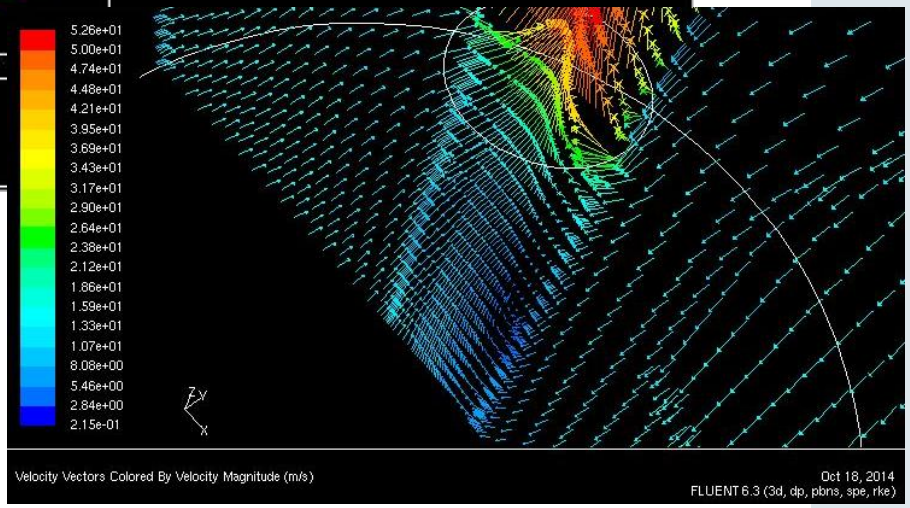

Flow in the pipes and in the tank: Velocity

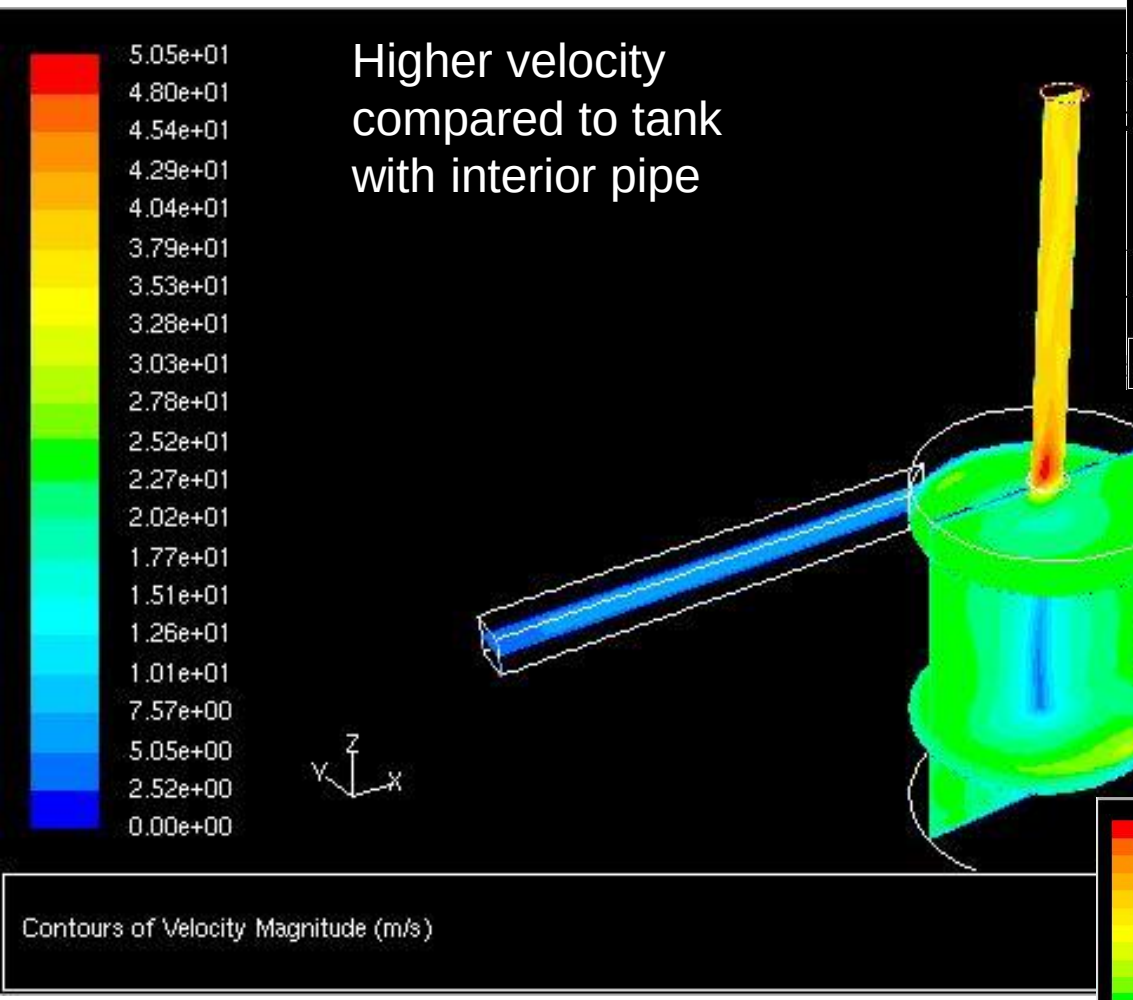

Higher velocity compared to tank with interior pipe

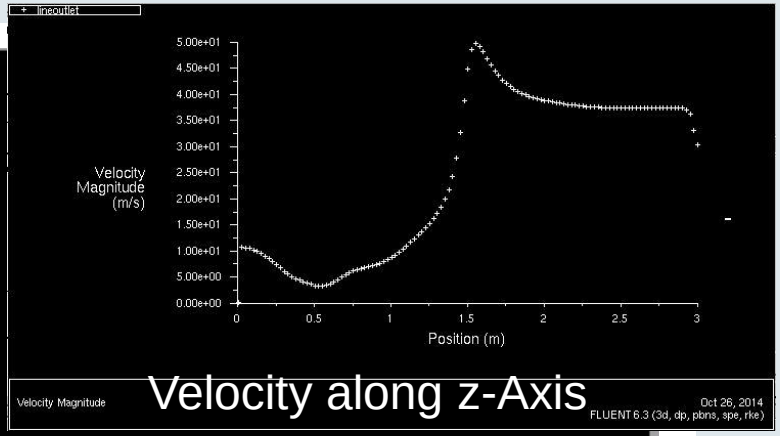

Velocity along z-Axis

Area-Weighted Average Velocity Magnitude	(m/s)
outlet	35.360844

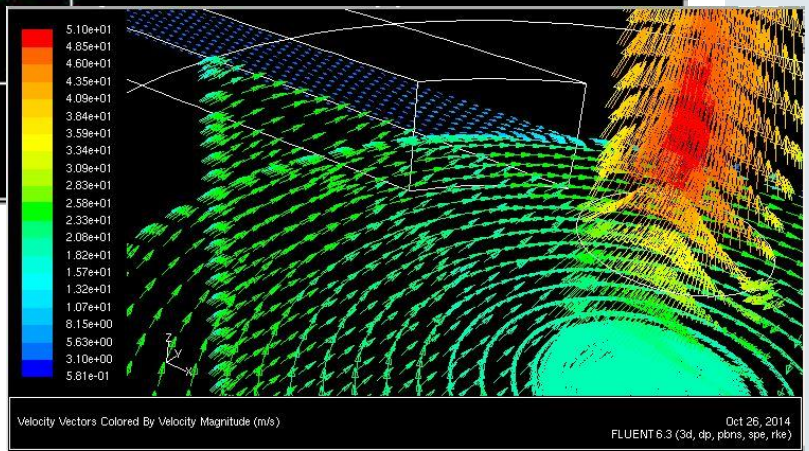

Flow in the pipes and in the tank: Velocity

- Velocity along the inlet pipes without interior outlet pipe:

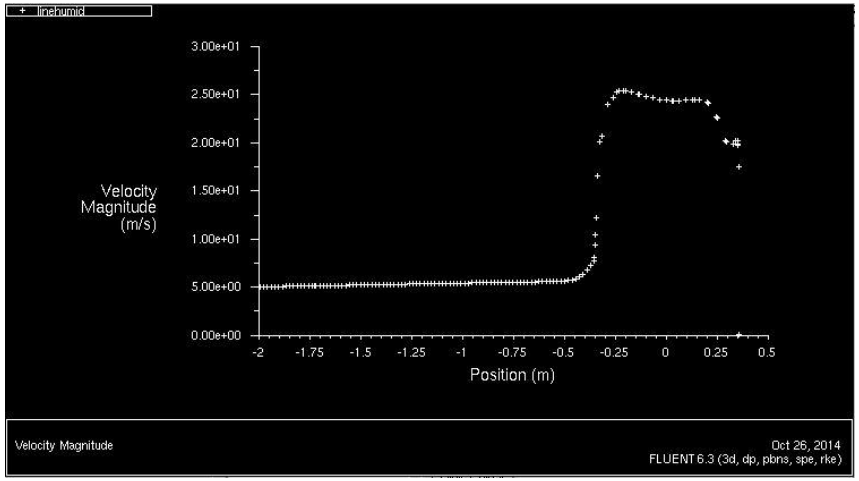

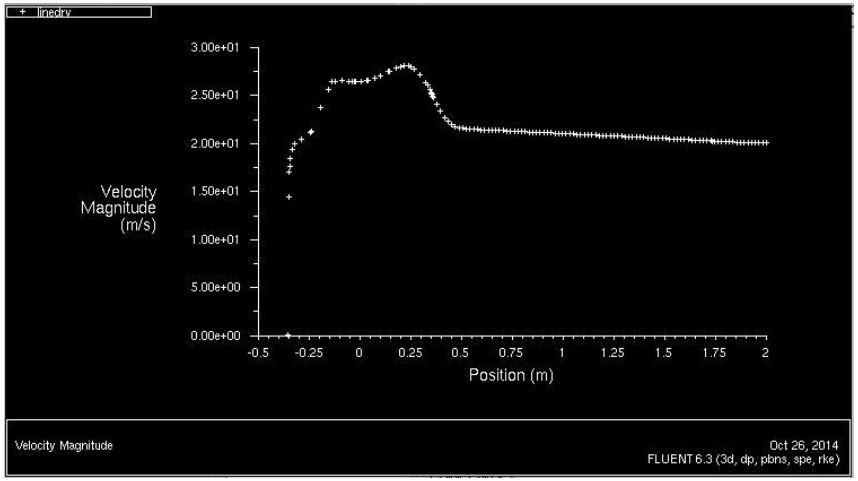

- With interior outlet pipe:

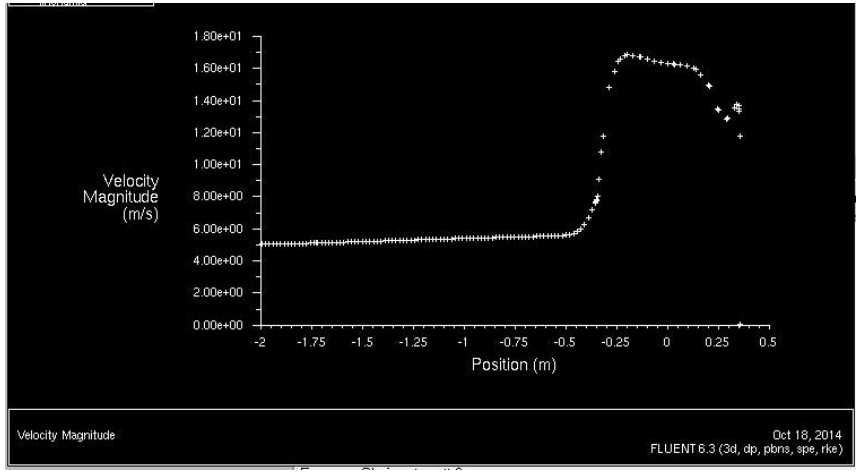

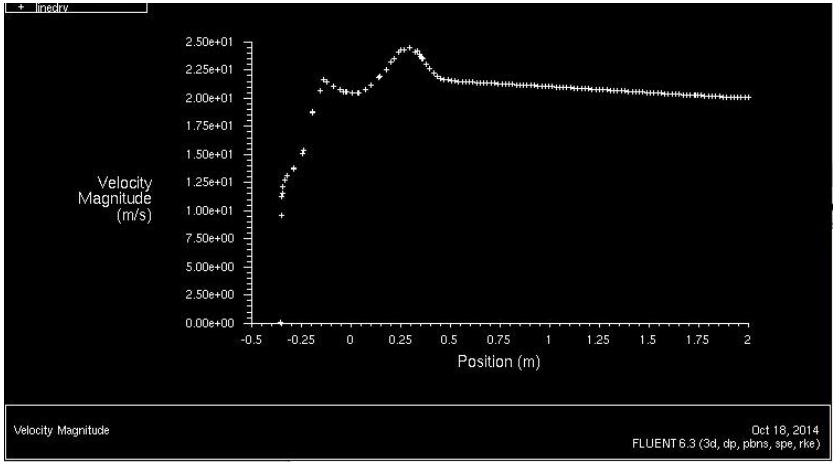

Flow in the pipes and in the tank: Pressure

- With interior exit pipe

Area-Weighted Average Absolute Pressure	(pascal)
dry_air	103529.47
humid_air	103443.41
outlet	101325.73

- Pressure drop in tank 2203,74 Pa

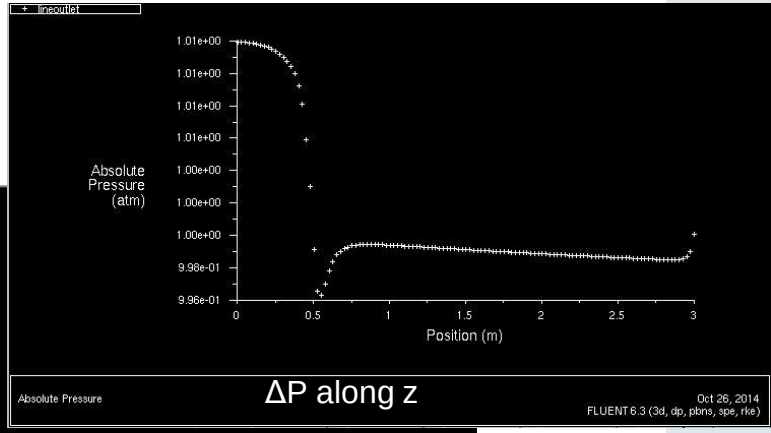

ΔP along z

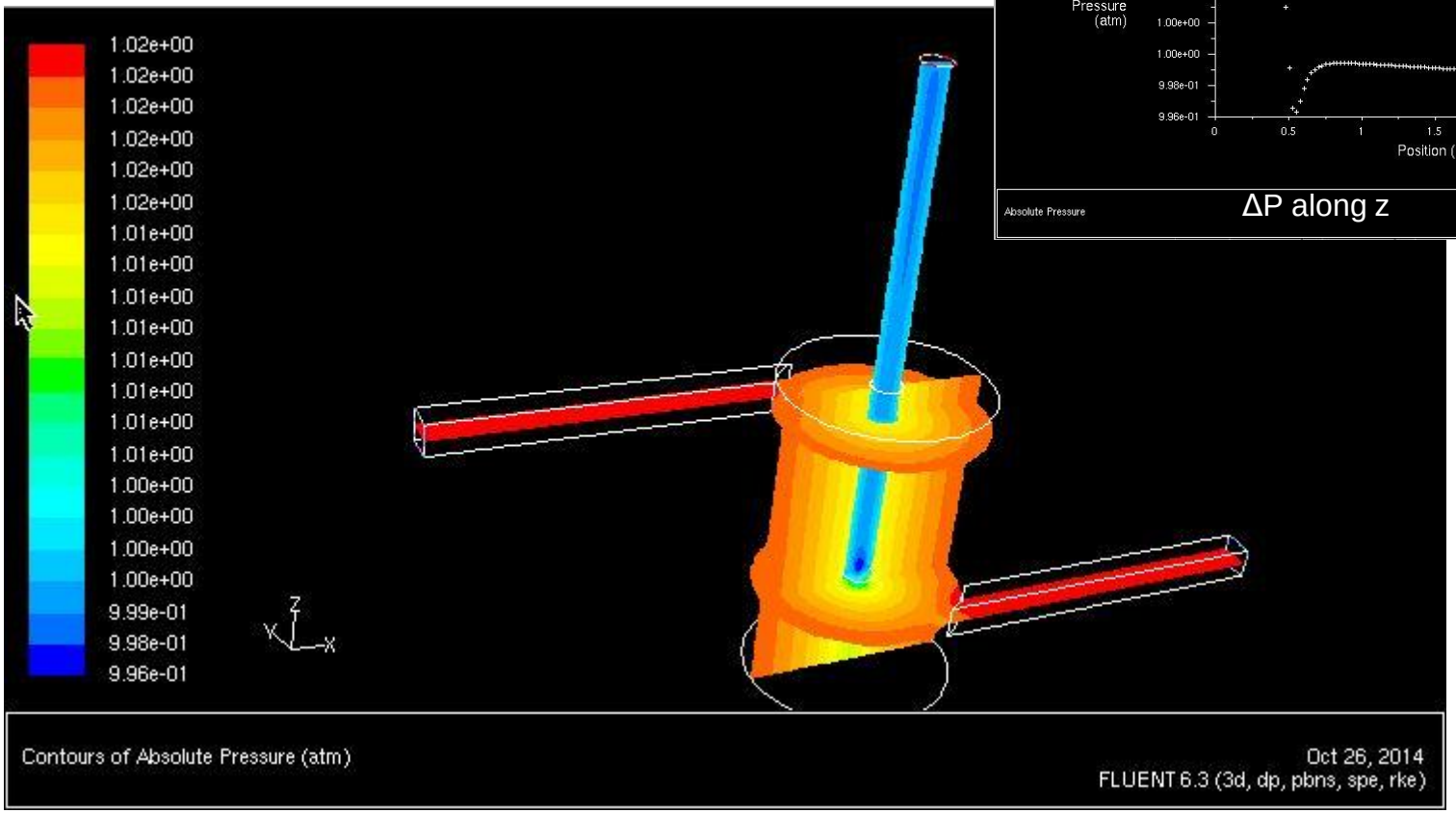

Flow in the pipes and in the tank: Pressure

- Without interior exit pipe

Area-Weighted Average Absolute Pressure	(pascal)
dry_air	103081.26
humid_air	103005.16
outlet	101326.19

- Pressure drop in tank 1755,26 Pa

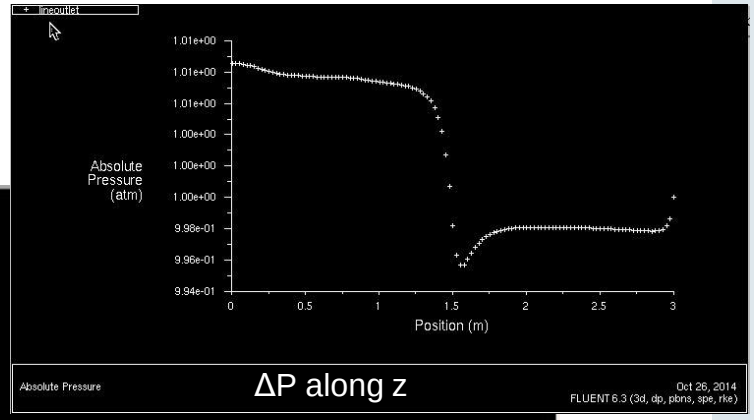

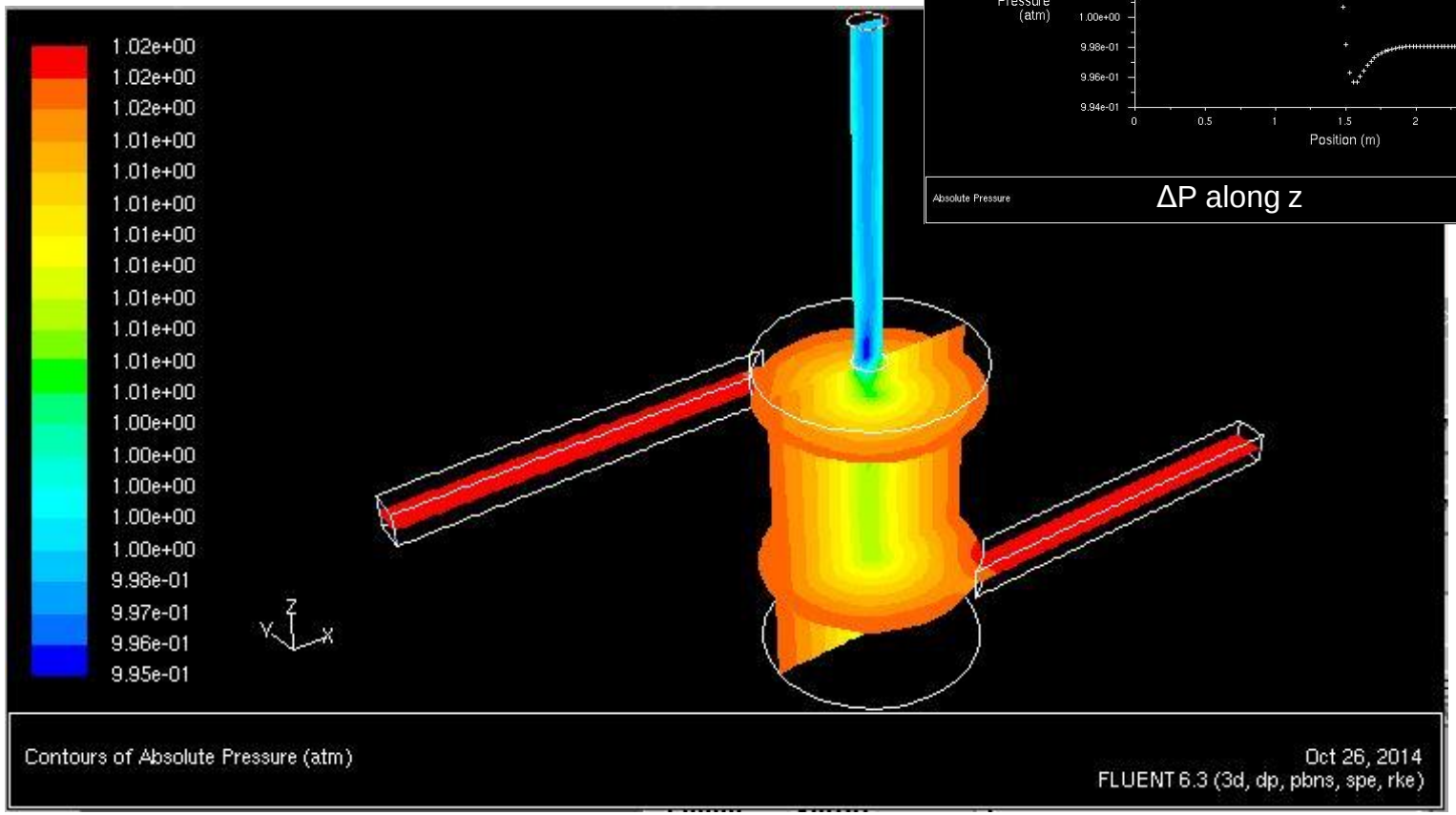

Flow in the pipes and in the tank: Pressure

- Calculated Pressure loss in the pipes:

$$\Delta p = \zeta \frac{l}{d_i} \frac{\rho u_i^2}{2}.$$

  - $10^4 < Re < 10^6$ equation of Konakov

    humid air: Re = 30 759 → ζ = 0,023

$$\zeta = (1{,}8 \lg Re_i - 1{,}5)^{-2}.$$

  - $10^5 < Re < 10^7$ equation of Filonenko

    dry air: Re = 133 967 → ζ = 0,017

$$\frac{1}{\sqrt{\zeta}} = 1{,}819 \cdot \lg(Re_i) - 1{,}64$$

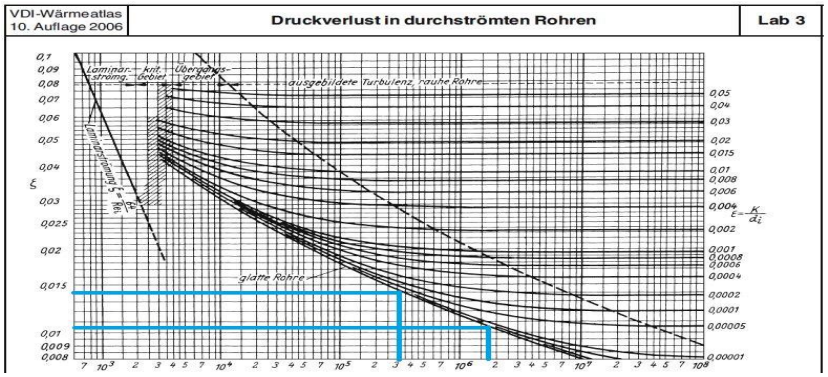

- Drag coefficient for inlet and outlet of tubes:

$$\Delta p = \zeta \rho \cdot \frac{w^2}{2}$$

  - Inlet: ζ = 0.5

  - outlet: ζ = 1

Rohreinbauelement	Skizze	Gleichung für den Druckabfall	ζ-Wert
Rohreinläufe		4.72	0,5-245

Source: VDI-Wärmeatlas 10. Auflage 2006
Abschnitt Lab 1: Druckverlust in durchströmten Rohren

Flow in the pipes and in the tank: Pressure

- Calculated Pressure loss humid air:
- Calculated with a outlet velocity of 32 m/s
  - Fluent velocity: 34m/s

Pressure loss in tank from humid air inlet	short pipe	long pipe	ΔP Fluent short [Pa]	ΔP Fluent long [Pa]
Eintrittsverlust humid air [Pa]	4,17	4,17		
Austrittsverlust humid air [Pa]	8,35	8,35		
Reibungsverlust humid air [Pa]	**1,80**	**1,80**	**2,25**	**2,25**
Einlaufverlust outlet [Pa]	230,74	230,74		
Auslaufverlust outlet [Pa]	461,49	461,49		
Reibungsverlust outlet [Pa]	67,35	134,69		
Sum tank [Pa]	**773,90**	**841,25**	**1678,97**	**2117,68**

Without int. pipe

Area-Weighted Average Absolute Pressure	(pascal)
humid_air	103005.16
outlet	101326.19
x=-0.5	103002.91

With int. pipe

Area-Weighted Average Absolute Pressure	(pascal)
humid_air	103443.41
outlet	101325.73
x=-0.5	103441.16

Flow in the pipes and in the tank: Pressure

- Calculated Pressure loss dry air:
- Calculated with a outlet velocity of 32 m/s
  - Fluent velocity: 35m/s

Pressure loss in tank from dry air inlet	short pipe	long pipe	ΔP Fluent short [Pa]	ΔP Fluent long [Pa]
Eintrittsverlust dry air [Pa]	95,97	95,97		
Austrittsverlust dry air [Pa]	191,95	191,95		
Reibungsverlust dry air [Pa]	**32,49**	**32,49**	**31,97**	**31,98**
Einlaufverlust outlet [Pa]	230,74	230,74		
Auslaufverlust outlet [Pa]	461,49	461,49		
Reibungsverlust outlet [Pa]	67,35	134,69		
Sum tank [Pa]	**1079,99**	**1147,34**	**1755,07**	**2203,74**

Without int. pipe

Area-Weighted Average Absolute Pressure	(pascal)
dry_air	103081.26
outlet	101326.19
x=0.5	103049.29

With int. pipe

Area-Weighted Average Absolute Pressure	(pascal)
dry_air	103529.47
outlet	101325.73
x=0.5	103497.49

Flow in the pipes and in the tank: Turbulence

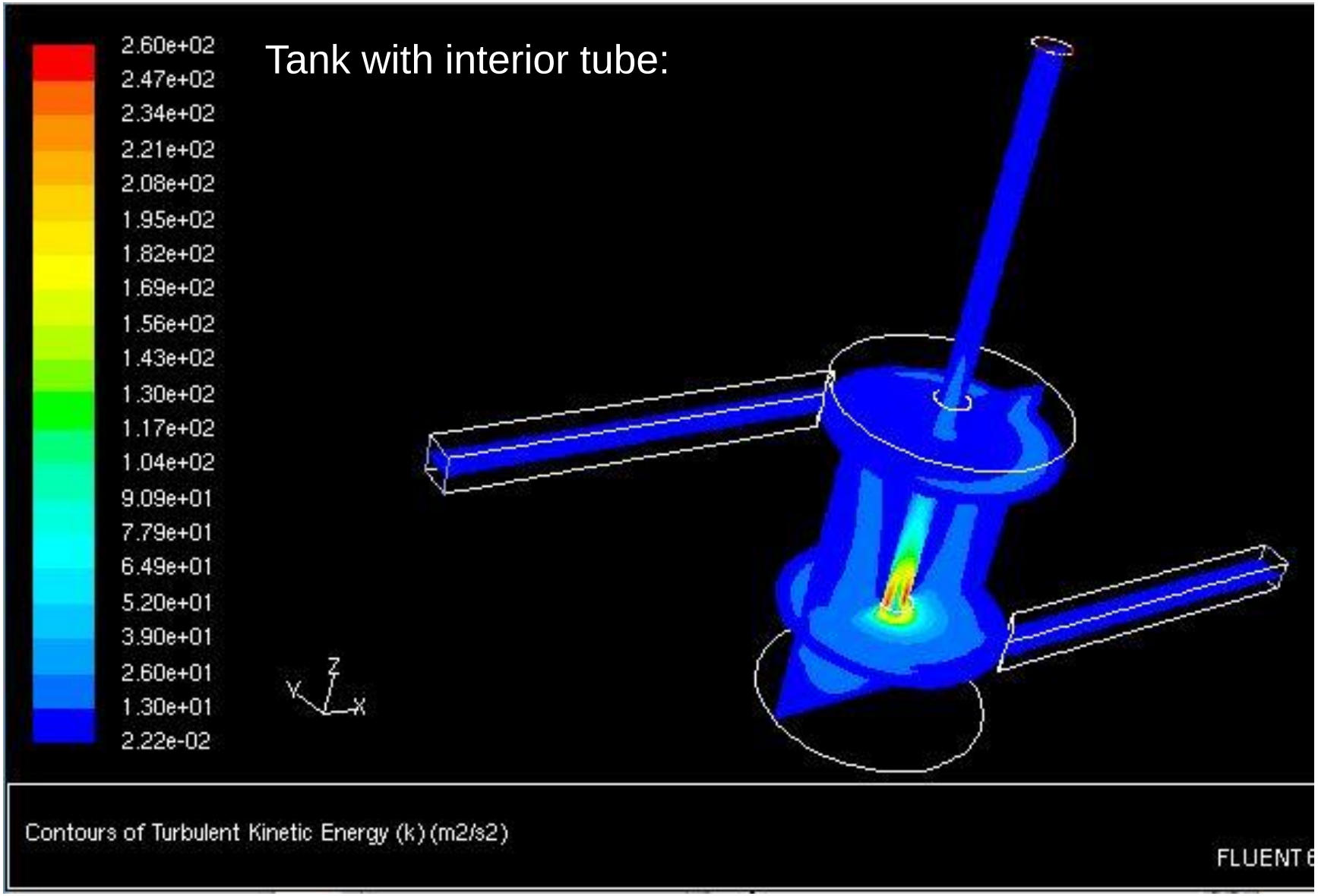

Flow in the pipes and in the tank: Turbulence

- Tank with interior tube

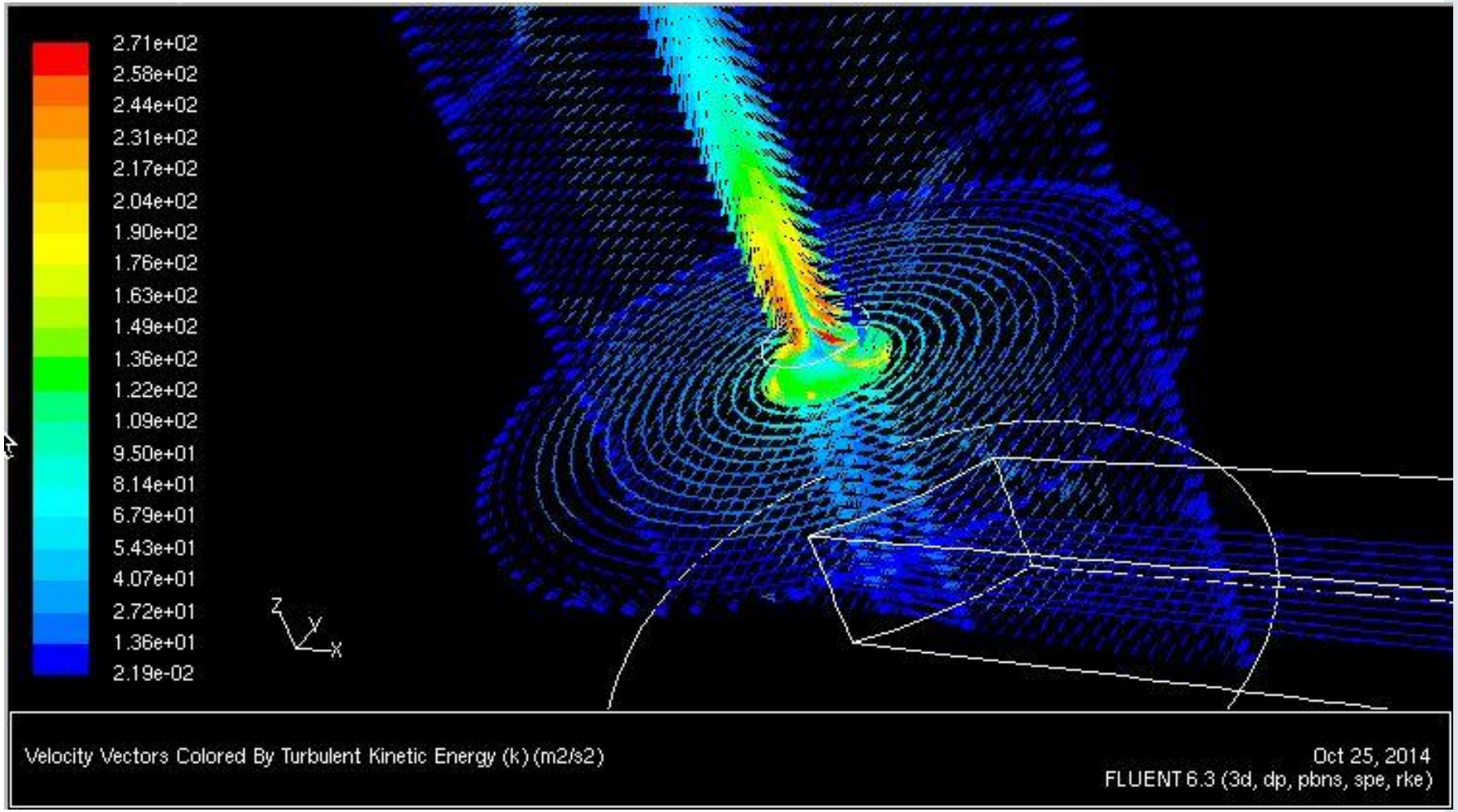

Flow in the pipes and in the tank: Turbulence

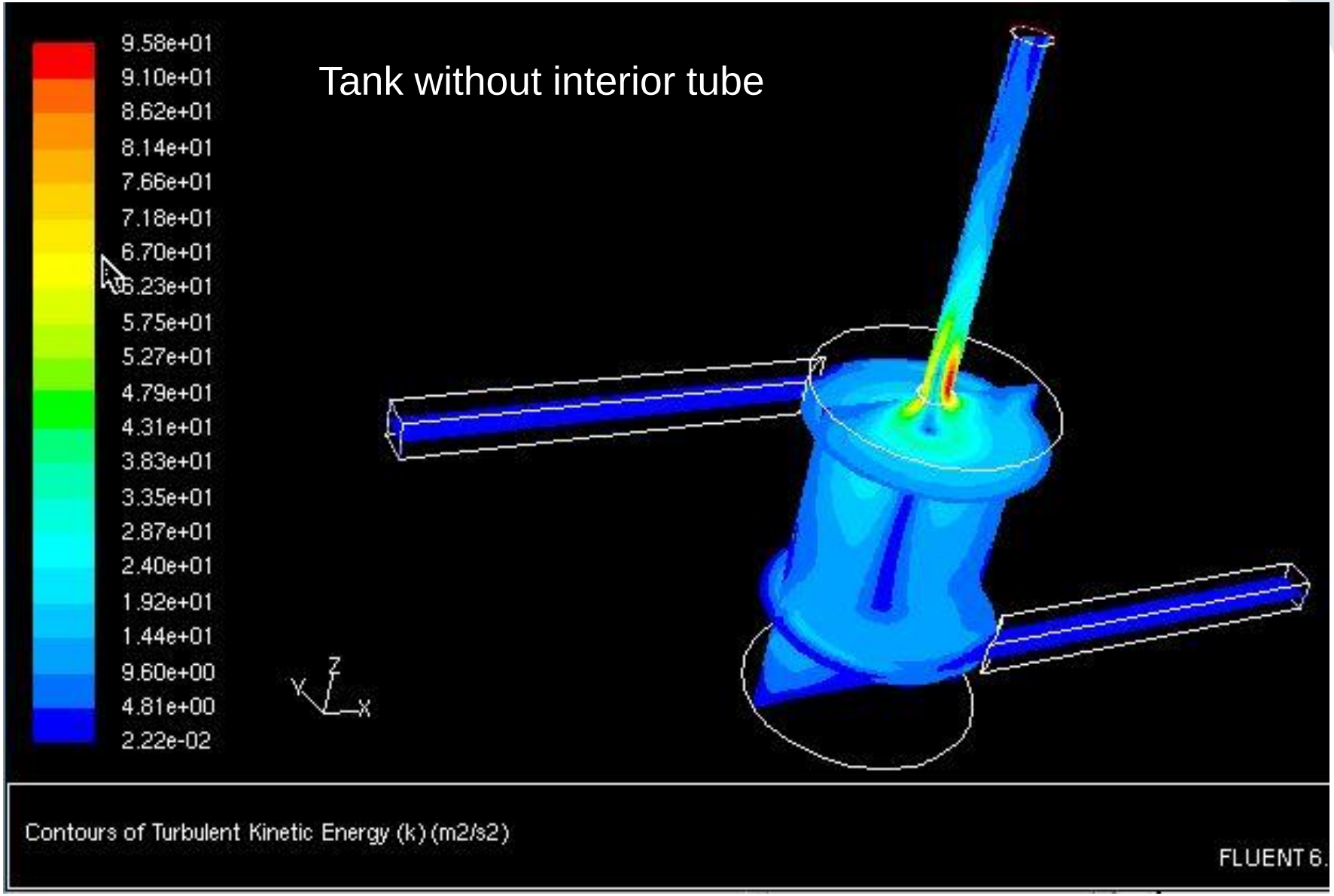

Flow in the pipes and in the tank: Turbulence

- Tank without interior tube

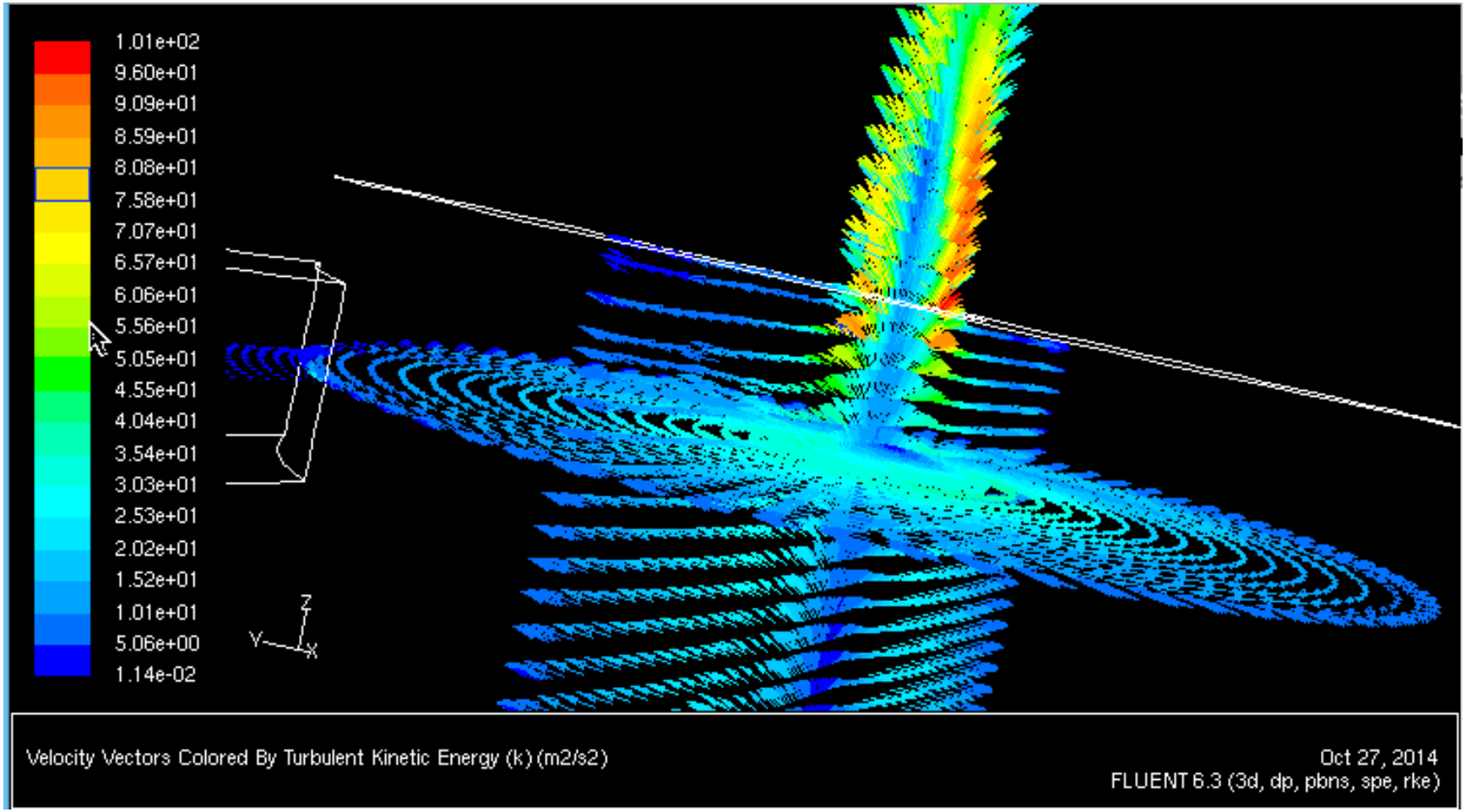

Flow in the pipes and in the tank: Humidity

- Tank with interior pipe:

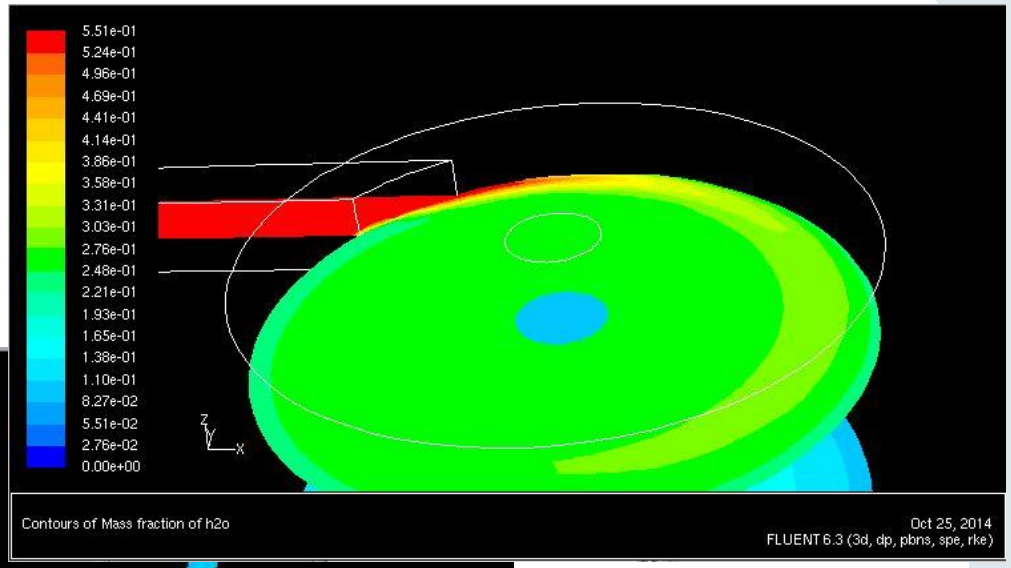

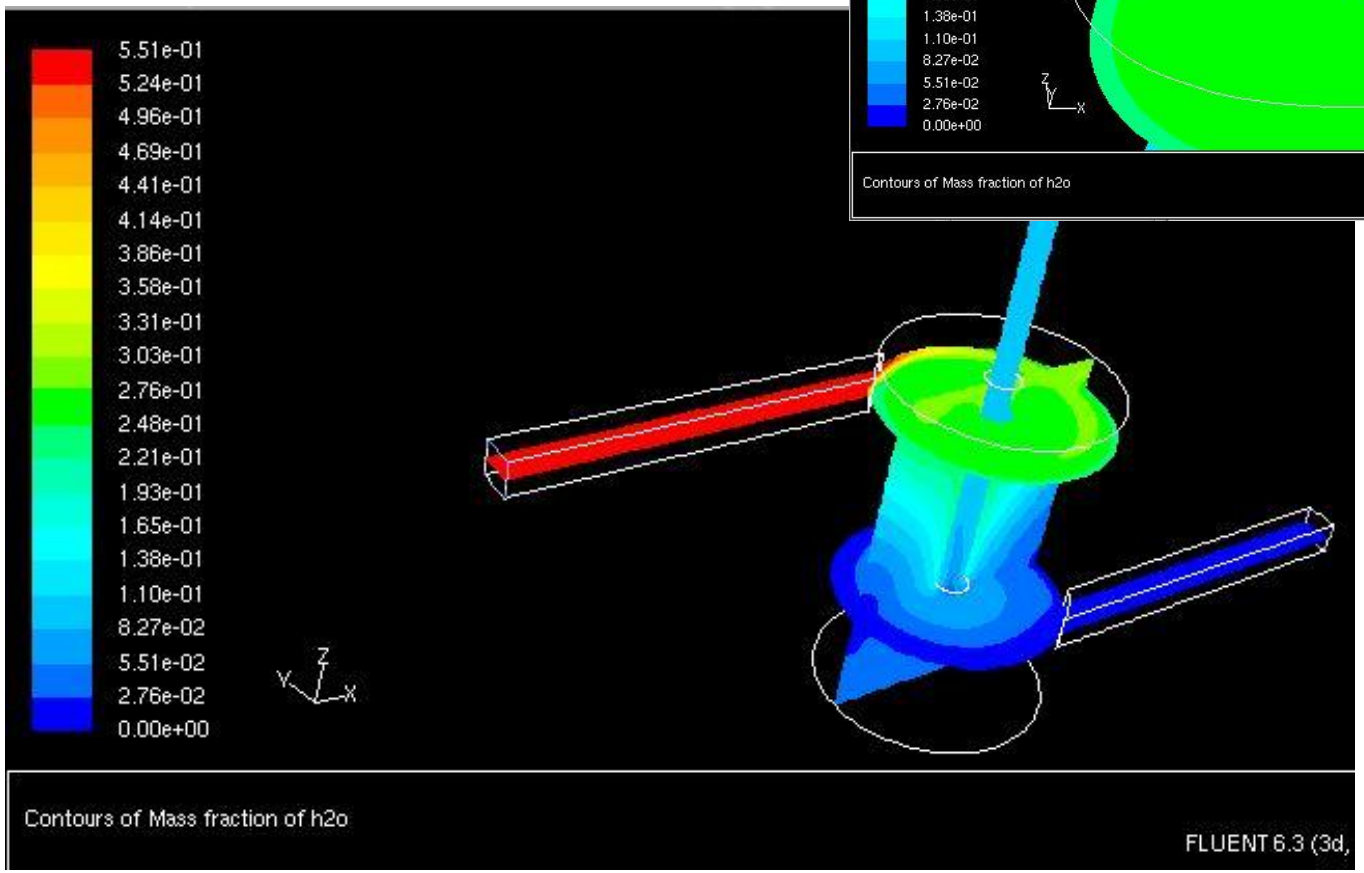

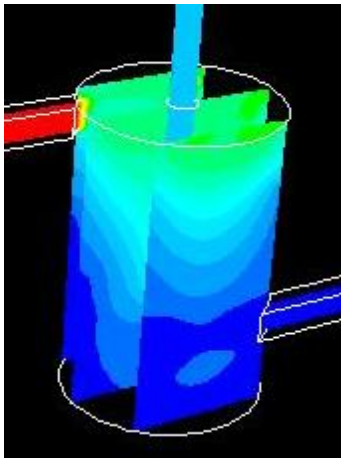

Flow in the pipes and in the tank: Humidity

- Tank without interior pipe

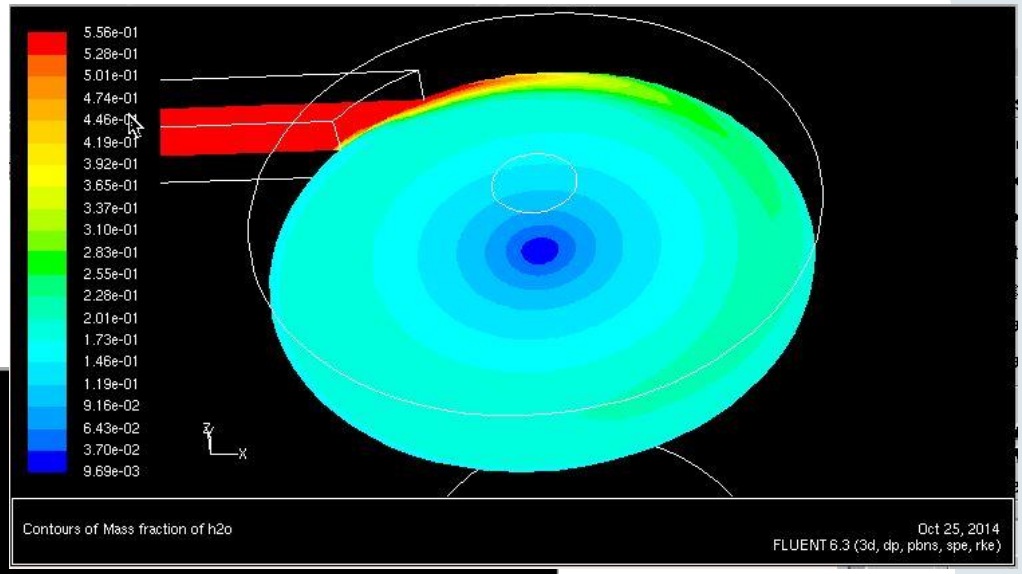

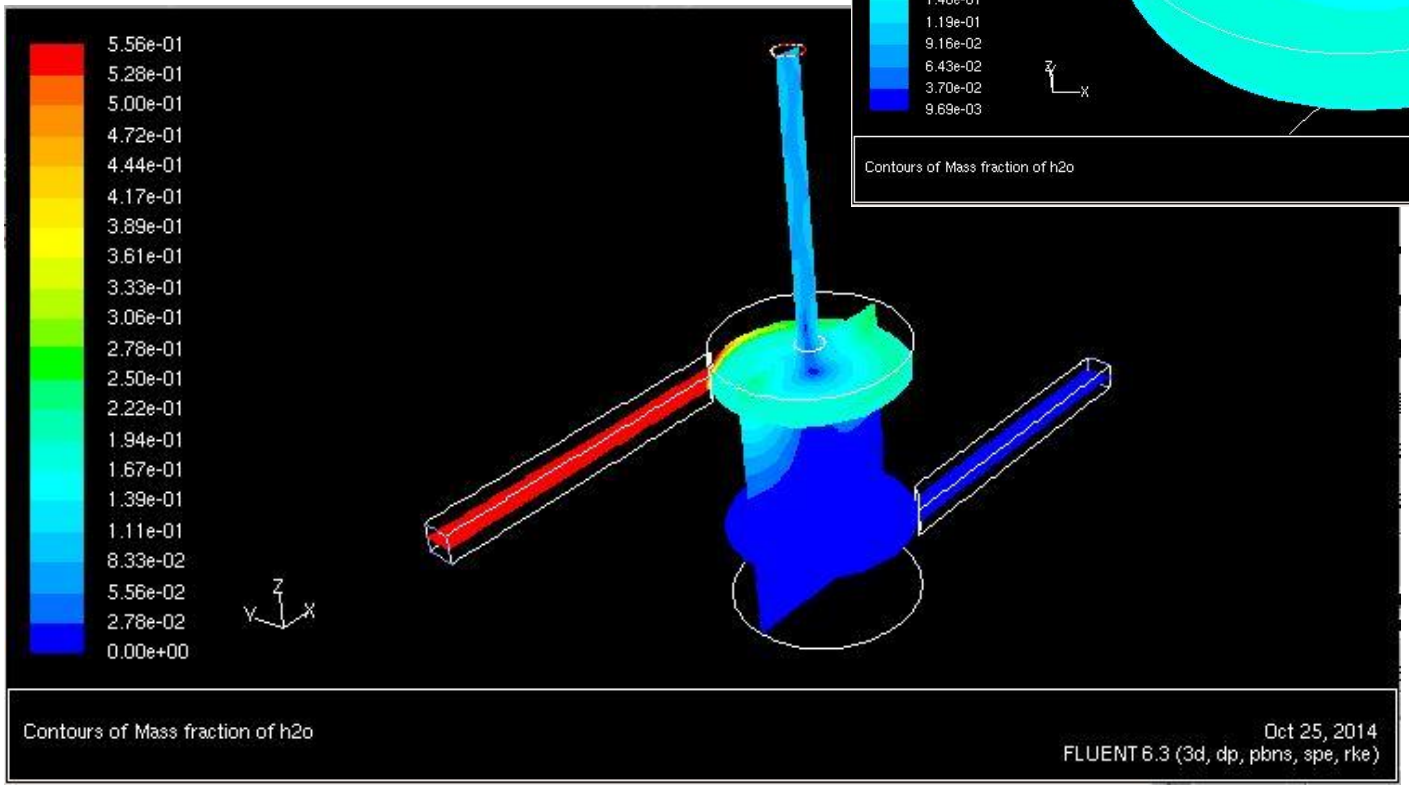

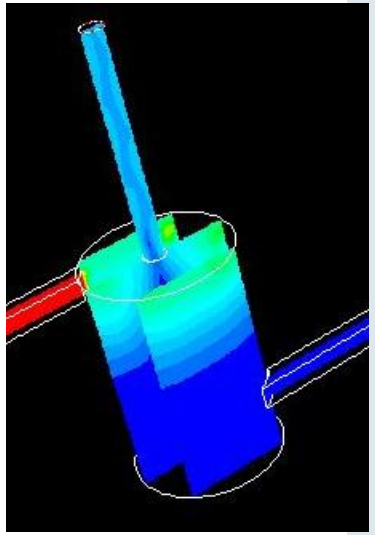

Homogenity of the mixture

- Mass fraction of H2O at the outlet
  - With int. Pipe

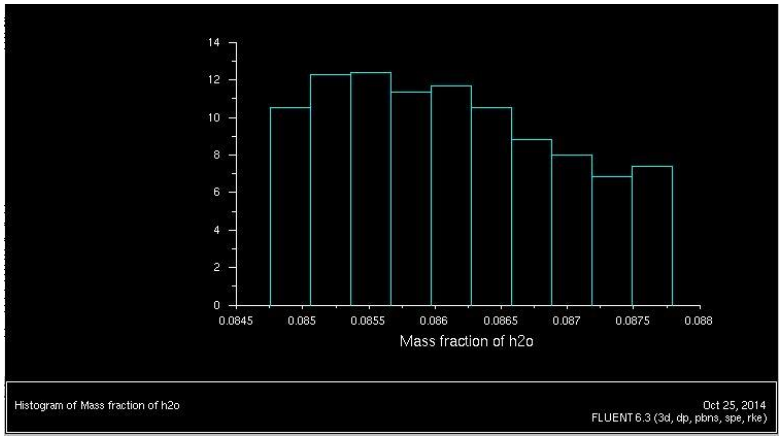

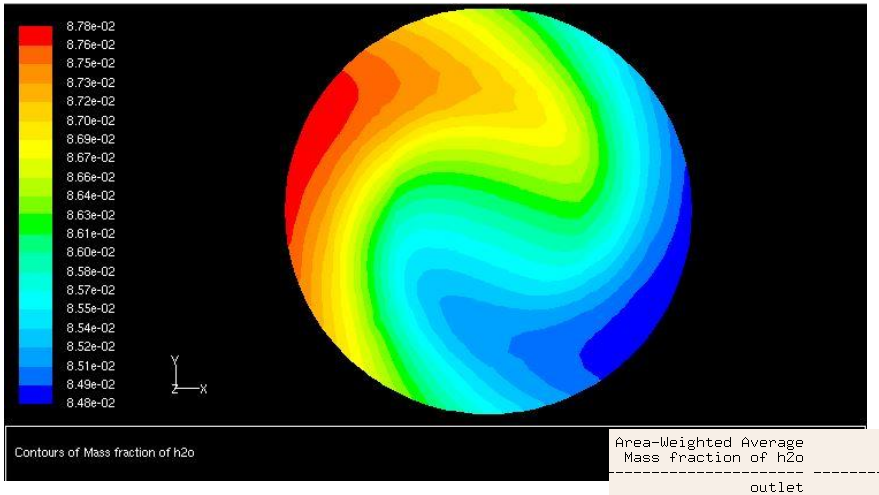


```
Area-Weighted Average
 Mass fraction of h2o
---------------------- ----------------------
                outlet           0.086139403
```

  - Without int. Pipe

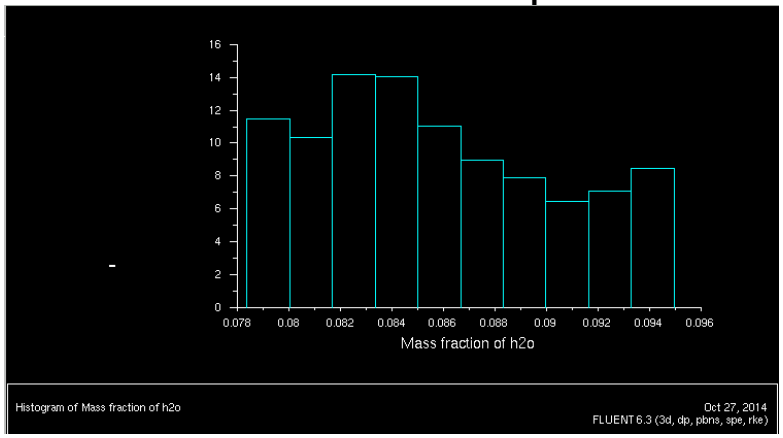

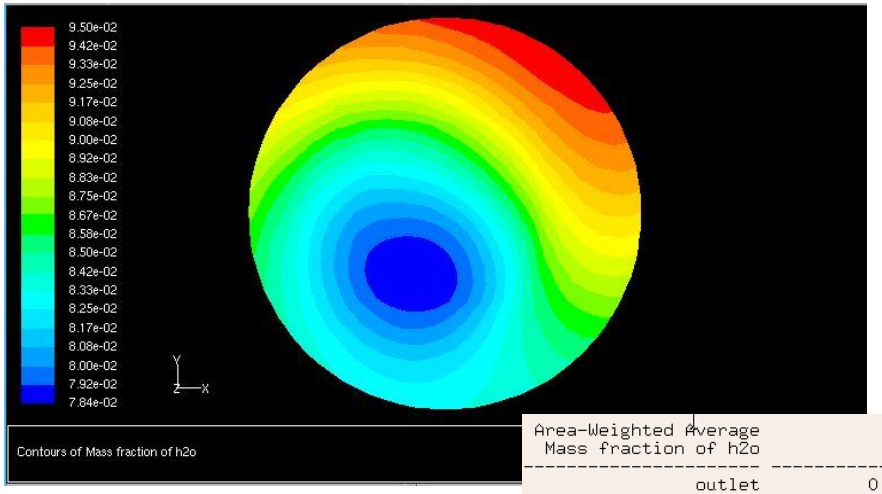


```
Area-Weighted Average
 Mass fraction of h2o
---------------------- ----------------------
                outlet           0.086028077
```

Residence time distribution

- With interior pipe

```
DPM Iteration ....
number tracked = 800, escaped = 778, aborted = 0, trapped = 0, evaporated = 0,

DPM Iteration ....
number tracked = 800, escaped = 780, aborted = 0, trapped = 0, evaporated = 0,
```

  - Residence time dry air

```
for time
  total number = 780
  mean = 3.10749
  standard deviation = 2.50475
```

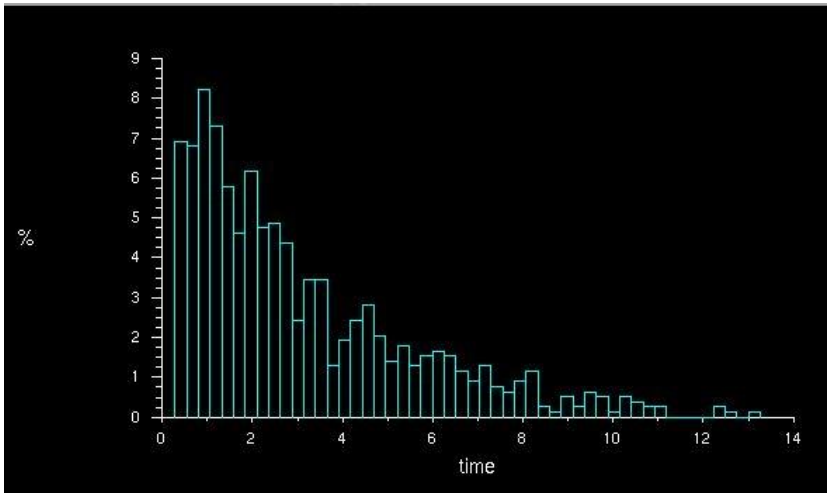

  - Residence time humid air

```
for time
  total number = 779
  mean = 3.9105
  standard deviation = 2.67817
```

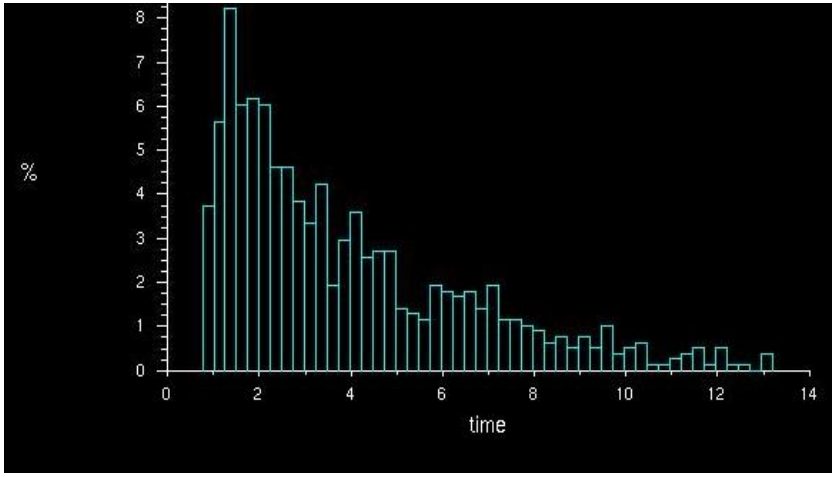

Residence time distribution

- Without interior pipe

```
DPM Iteration ....
number tracked = 80, escaped = 77, aborted = 0, trapped = 0, evaporated = 0,

DPM Iteration ....
number tracked = 80, escaped = 80, aborted = 0, trapped = 0, evaporated = 0,
```

  - Residence time dry air

```
for time
  total number = 75
  mean = 3.00461
  standard deviation = 2.02207
```

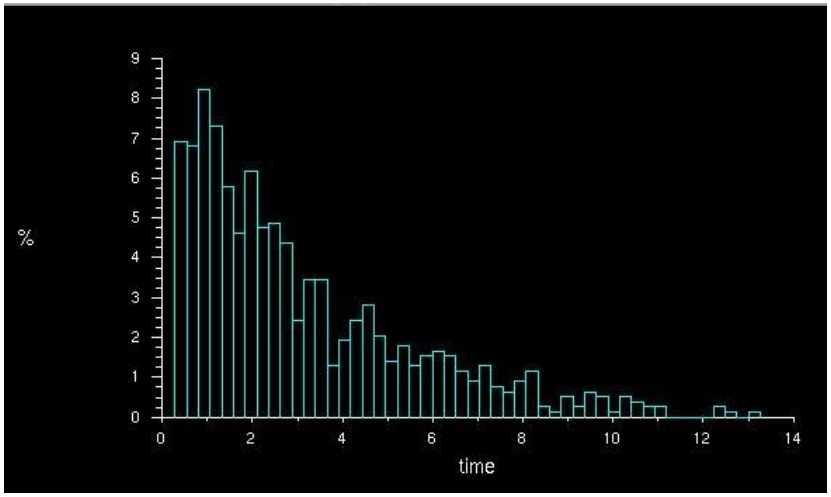

  - Residence time humid air

```
for time
  total number = 79
  mean = 2.79766
  standard deviation = 2.4658
```

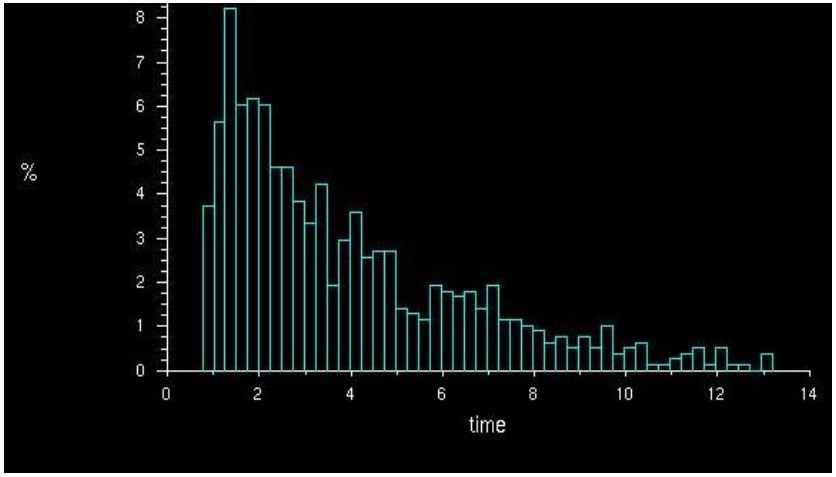

Residence time distribution

- Pathlines from dry air and from humid air

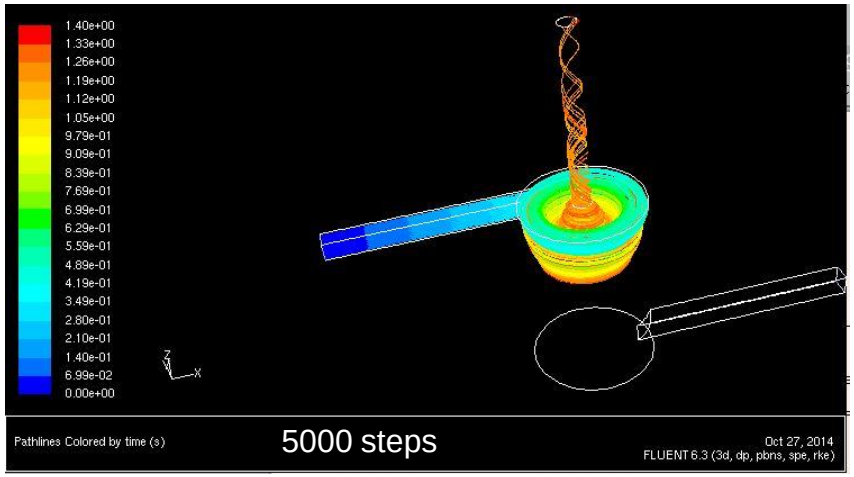

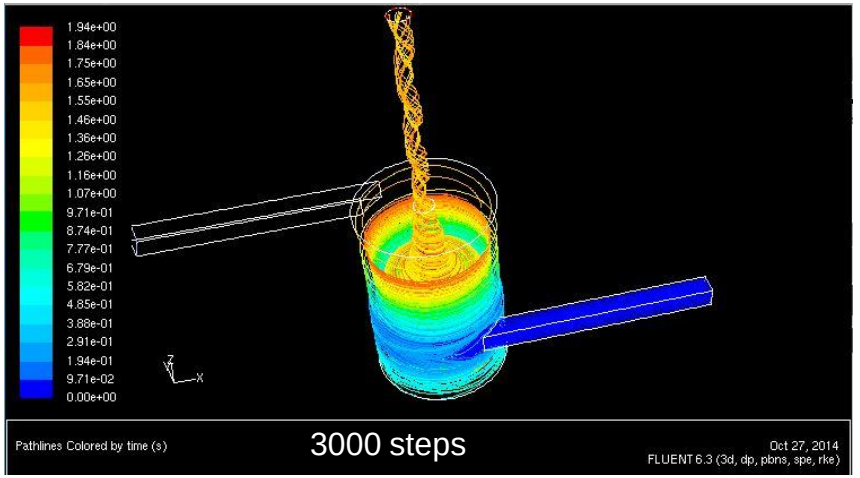
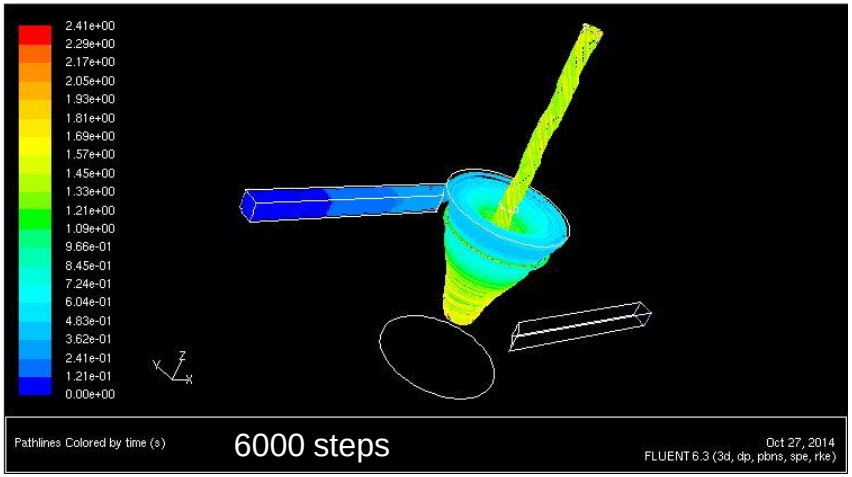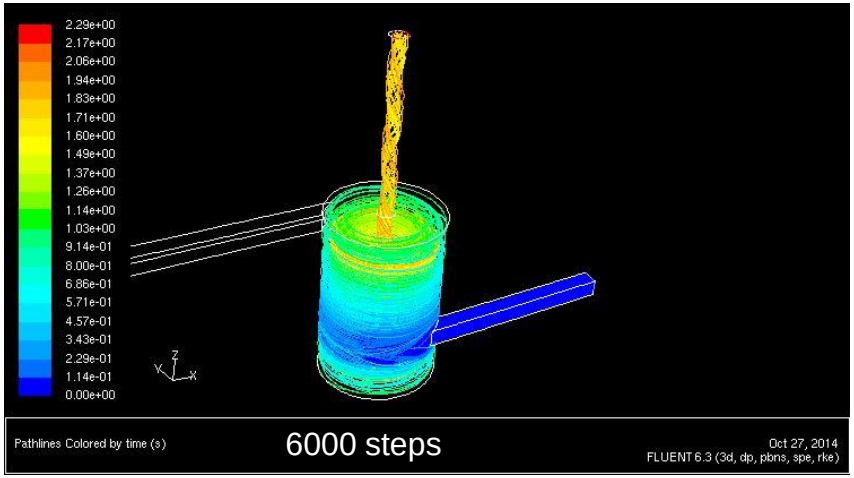
- Pathlines with interior pipe: